Specifications

Item		Specification	
Transmission type		A6MF1	
Engine model		Gasoline 2.0	Gasoline 2.4
Torque converter type		3-element, 1-stage, 2-phase type	
Torque converter size		Ø236 mm (9.2913 in.)	
Oil pump system		Parachoid	
Friction elements		Clutch: 2EA	
		Brake: 3EA	
		OWC : 1EA	
Planetary gear		3EA	
Gear ratio	1st	4.162	4.212
	2nd	2.575	2.637
	3rd	1.772	1.800
	4th	1.369	1.386
	5th	1.000	1.000
	6th	0.778	0.772
	Reverse	3.500	3.385
Final gear ratio		3.648	3.195
Fluid pressure balance piston		3EA	
Accumulator		4EA	
Solenoid valve		8EA (VFS:6EA, ON/OFF:2EA)	
Shift lever position		4 Range (P,R,N,D)	
Oil filter		1EA	

VFS: Variable Force Solenoid

Tightening Torques

Item	N.m	Kgf.m	lb-ft
TCM installation mounting bolt	7.8 ~ 11.8	0.8 ~ 1.2	5.8 ~ 8.7
Shift cable bracket mounting bolt	14.7 ~ 21.6	1.5 ~ 2.2	10.9 ~ 15.9
Input shaft speed sensor mounting bolt	9.8 ~ 11.8	1.0 ~ 1.2	7.2 ~ 8.7
Output shaft speed sensor mounting bolt	9.8 ~ 11.8	1.0 ~ 1.2	7.2 ~ 8.7
Shift lever assembly bolt	8.8 ~ 13.7	0.9 ~ 1.4	6.5 ~ 10.1
Inhibitor switch mounting bolt	9.8 ~ 11.8	1.0 ~ 1.2	7.2 ~ 8.7
Valve body cover mounting bolt	9.8 ~ 11.8	1.0 ~ 1.2	7.2 ~ 8.7
Eyebolt	34.3 ~ 44.1	3.5 ~ 4.5	25.3 ~ 32.6
Oil drain plug	34.3 ~ 44.1	3.5 ~ 4.5	25.3 ~ 32.6
Oil level plug	34.3 ~ 44.1	3.5 ~ 4.5	25.3 ~ 32.6
Torque converter mounting bolt	45.1 ~ 52.0	4.6 ~ 5.3	33.3 ~ 38.3
Automatic transaxle upper mounting bolt	42.2 ~ 53.9	4.3 ~ 5.5	31.3 ~ 39.8

mcx30.com

Automatic transaxle support bracket bolt	88.3 ~107.9	9.0~11.0	65.1 ~ 79.8

Lubricants

Item	Specified lubricant	Quantity
Transaxle fluid	SK ATF SP-Ⅳ, MICHANG ATF SP-Ⅳ, NOCA ATF SP-Ⅳ, Hyundai Genuine ATF SP-Ⅳ or other brands meeting the above specification approved by Hyundai Motors Corp.	7.1L (1.88 U.S gal., 7.50 U.S.qt., 6.24 Imp.qt.)

Sealant

Item	Specified sealant
Rear cover Torque converter housing Valve body cover	LOCTITE FMD-546 or THREE-BOND TB1281B

Automatic Transaxle System > General Information > Special Service Tools

Special Service Tools

Tools (Number and name)	Illustration	Use
09200-38001 Engine support fixture (Beam)	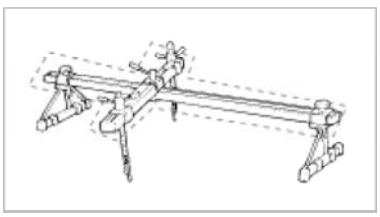	Removal and installation of the transaxle. Except lower supporter, use beam only with new engine support fixture supporter(SST No.:09200-2S000)
09200-2S000 Engine support fixture (Supporter)	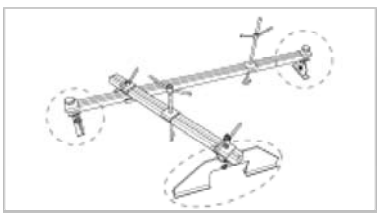	Removal and installation of the transaxle. Use this supporter with the upper beam of the engine support fixture(SST No.:09200-38001)
09453-3L241 Oil seal installer	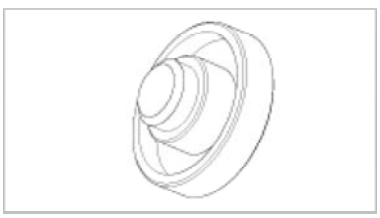	Installation of transaxle case oil seal. [Using with handle (SST No.:09231-H1100)]
09231-H1100 Bar		Installation of transaxle case oil seal. [Using with oil seal installer (SST No.:09453-3L241)]

Automatic Transaxle System > Automatic Transaxle System > Repair procedures

mcx30.com

Oil level Check

NOTE

A check of ATF level is not normally required during scheduled services. If an oil leak is found, perform the oil level check procedure after repairs are completed.

CAUTION

When checking the oil level, be careful not to enter dust, foreign matters, etc. from fill hole.

1. Remove the eyebolt (A).

Eyebolt tightening torque:
34.3~44.1 N.m (3.5~4.5 kgf.m, 25.3~32.6 lb-ft)

CAUTION

The gasket of the eyebolt use new one.

2. Add ATF SP-IV 700cc to the ATF injection hole.

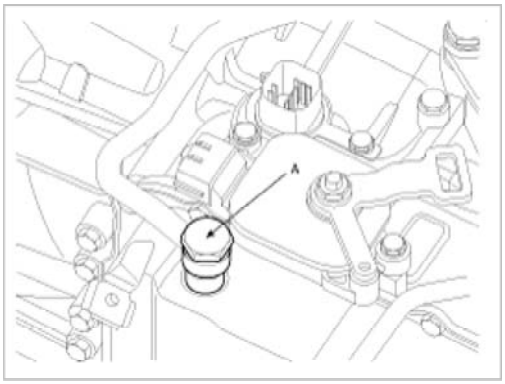

3. Start the engine. (Don't step on brake and accelerator simultaneously.
4. Confirm that the temperature of the A/T oil temperature sensor is 50~60°C(122~140°F) with the GDS.
5. Shift the select lever slowly from "P" to "D", then "D" to "P" and repeat one more at idle.

CAUTION

Keep on each speed position more than 2 sec.

6. Lift the vehicle, then remove the oil level plug (A) from the valve body cover.

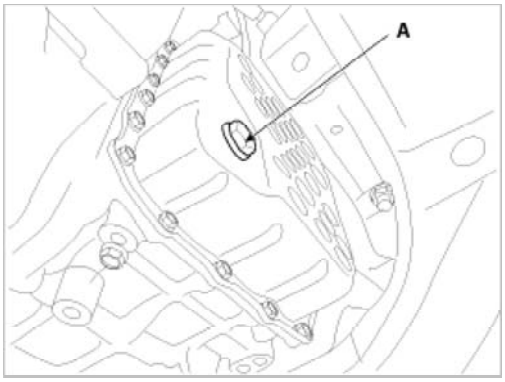

CAUTION

At this time, the vehicle must be a horizontal state.

7. If the oil flows out of the overflow plug in thin steady stream, the oil level is correct.

mcx30.com

NOTE

Oil level check (excess or shortage) method
- Excess: Oil flows out in thick stream.
- Shortage: No oil flows out of the overflow plug.

CAUTION

If there is no damage at the automatic transaxle and the oil cooler, the oil cooler hose, transaxle case, valve body tightening state are normal, ATF must drop out after performing above 1 to 7 procedures. After performing above 1 to 7 procedures, if the oil doesn't drop out, inspect the automatic transaxle assembly.

CAUTION

The gasket of the oil level plug use new one.

Oil level plug tightening torque:
34.3 ~ 44.1 N.m (3.5 ~ 4.5 kgf.m, 25.3 ~32.6 lb-ft)

8. Put down the vehicle with the lift and then tighten the eyebolt.

Replacement

NOTE

ATF of 6 speed automatic transaxle doesn't be replaced. But, if the vehicle is severe use or business use, replace ATF every 60,000 miles for severe usage.
Severe usage is defined as
- Driving in rough road (Bumpy, Gravel, Snowy, Unpaved road, etc)
- Driving in mountain road, ascent/descent
- Repetition of short distance driving
- More than 50% operation in heavy city traffic during hot weather above 32°C(89.6°F) .
- Police, Taxi, Commercial type operation or trailer towing, etc

1. Remove the drain plug (A) and reinstall the drain plug after draining ATF totally.

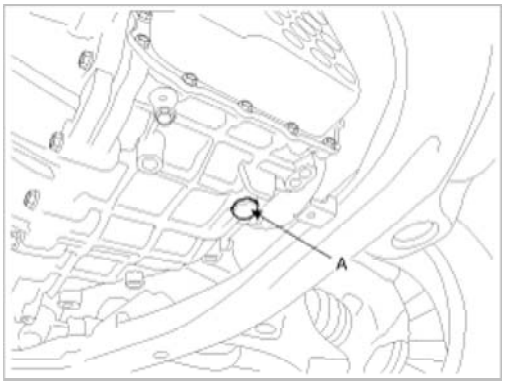

Drain plug tightening torque:
34.3 ~ 44.1 N.m (3.5 ~ 4.5 kgf.m, 25.3 ~32.6 lb-ft)

CAUTION

The gasket of the drain plug use new one.

2. Fill the oil about 5 liters.
3. Check the oil level. (Refer to Oil level check procedure.)

mcx30.com

Components and Components Location

Components (1)

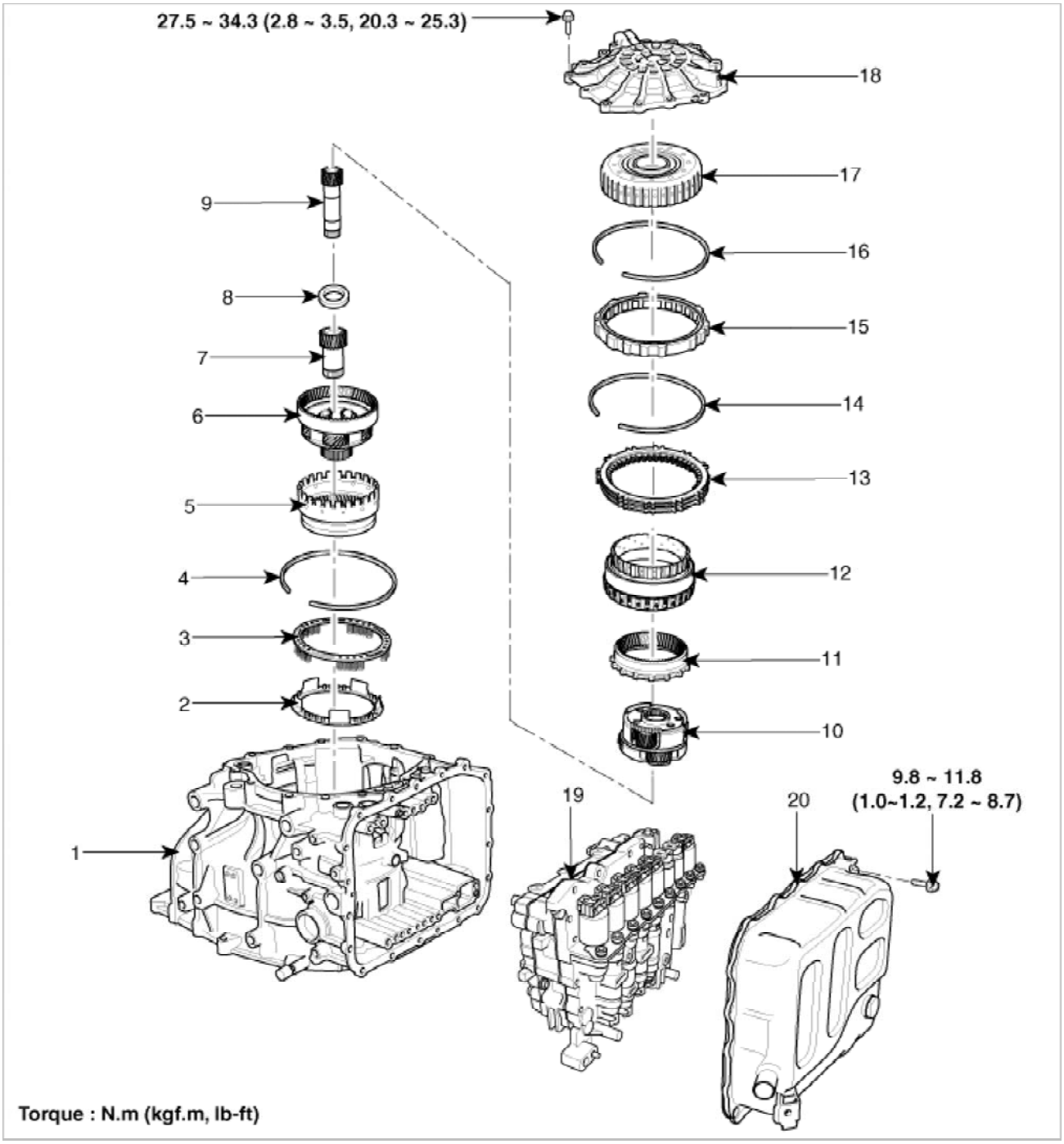

Components (2)

mcx30.com

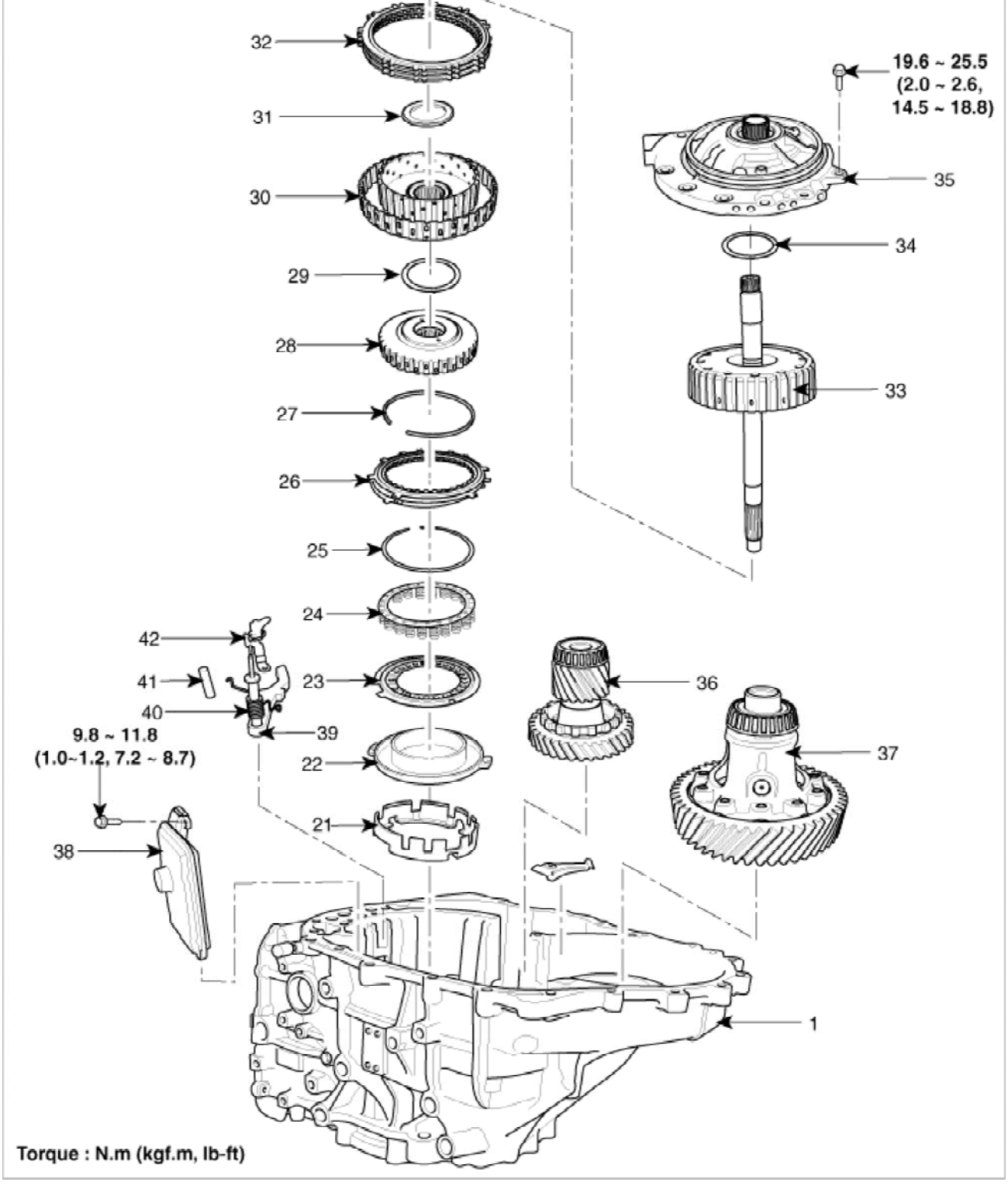

1. Automatic transaxle case	22. Under drive brake chamber
2. Low & reverse brake piston	23. Under drive brake piston
3. Low & reverse brake return spring	24. Under drive brake spring
4. Snap ring	25. Snap ring
5. Front annulus gear assembly	26. Under drive brake disc set
6. Front planetary gear assembly	27. Snap ring
7. Front sun gear assembly	28. Under drive brake hub assembly
8. Bearing	29. Thrust washer
9. Middle sun gear assembly	30. 35R & 2/6 hub assembly
10. Middle & rear planetary gear assembly	31. Thrust bearing
11. Rear annulus gear assembly	32. 2/6 brake disc set

mcx30.com

13. Low & reverse brake disc set	34. Thrust washer
14. Snap ring	35. Oil pump assembly
15. One way clutch assembly	36. Transfer driven gear assembly
16. Snap ring	37. Differential assembly
17. Overdrive clutch assembly	38. Oil filter assembly
18. Rear cover assembly	39. Parking sprag
19. Valve body assembly	40. Parking sprag shaft & spring
20. Valve body cover	41. Support shaft
21.Under drive brake retainer	42. Parking load guide

Components Location

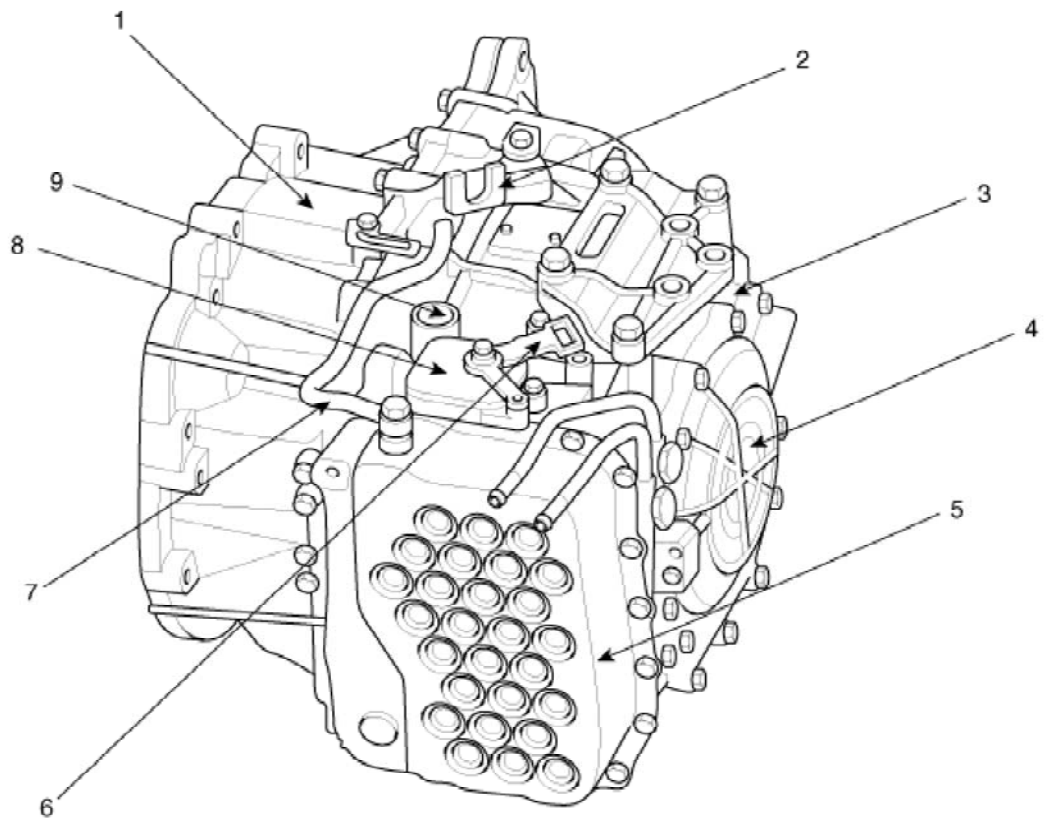

1. Converter housing	6. Manual control lever
2. Shift cable bracket	7. Air breather hose
3. Automatic transaxle case	8. Inhibitor switch
4. Rear cover	9. Solenoid valve connector
5. Valve body cover	

Automatic Transaxle System > Automatic Transaxle System > Automatic Transaxle > Repair procedures

mcx30.com

1. Remove the following items;
   A. Air duct (A) and engine cover (B). (Refer to "Intake and Exhaust system" in EM group.)
   B. Air cleaner assembly (C). (Refer to "Intake and Exhaust system" in EM group.)
   C. Battery and battery tray (D). (Refer to "Charging system" in EE group.)

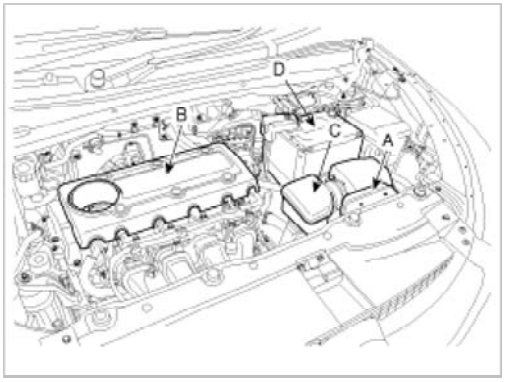

2. Dissconnect the solenoid valve connector (A) and inhibitor switch connector (B).

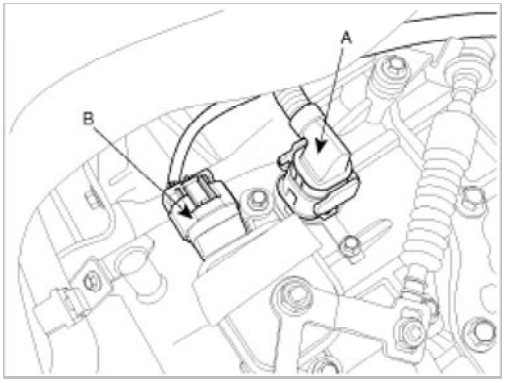

3. Remove the shift cable (C) after removing the nut (A) and the bolt (B).

Tightening torque:
(A) 7.8 ~ 11.8 N.m (0.8 ~ 1.2 kgf.m, 5.8 ~ 8.7 lb-ft)
(B) 14.7 ~21.6 N.m(1.5 ~2.2 kgf.m, 10.9 ~15.9 lb-ft)

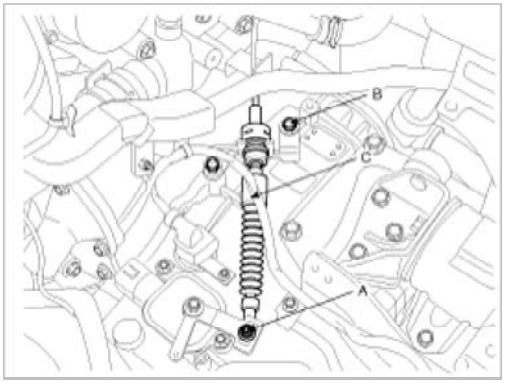

4. Remove the ground line after removing the bolt (A).

mcx30.com

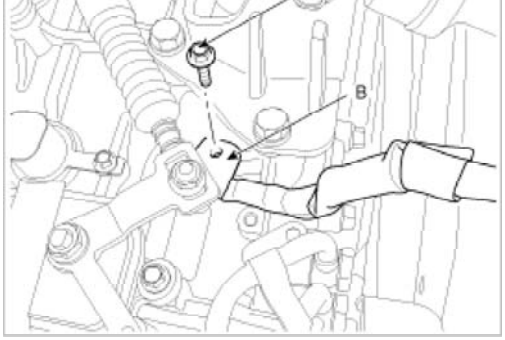

5. Disconnect the hose (B) after removing the automatic transaxle fluid cooler hose clamp (A).

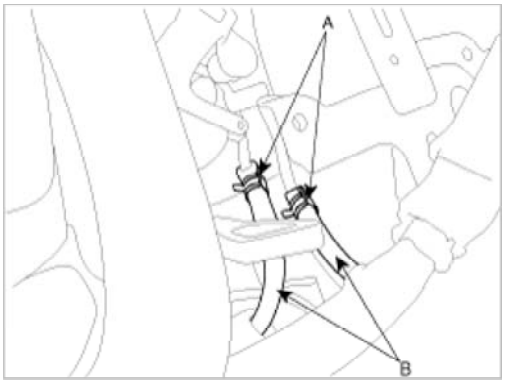

6. Remove the wiring bracket installation bolt (A).

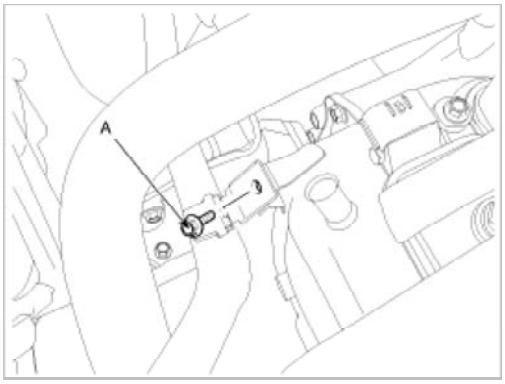

7. Remove the automatic transaxle upper mounting bolt (A-2ea) and the starter motor mounting bolt (B-2ea).

Tightening torque:
(A) 42.2 ~ 54.0 N.m (4.3 ~5.5 kgf.m, 31.1 ~ 39.8 lb-ft)
(B) 49.0 ~ 63.7 N.m (5.0 ~6.5 kgf.m, 36.2 ~ 47.0 lb-ft)

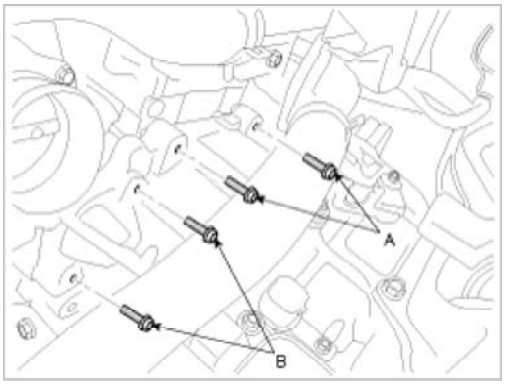

8. Remove the cowl top cover or wiper motor. (Refer to "Windshield Wiper/Washer" in BE group.)
9. Remove the cowl complete assembly panel(A).

mcx30.com

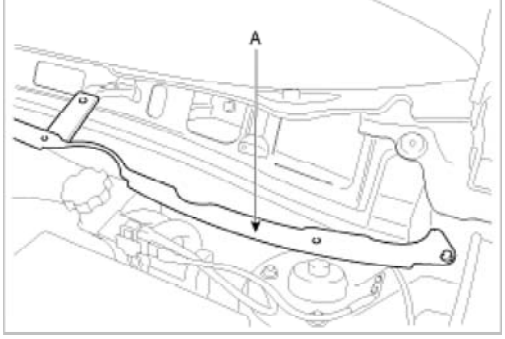

10. Using the engine support fixture (Support SST No.: 09200-2S000, Beam SST No.: 09200-38001), hold the engine and transaxle assembly safely.

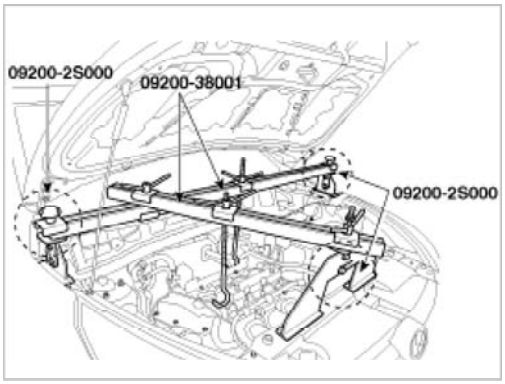

11. Remove the automatic transaxle mounting support bracket bolt (A).

Tightening torque:
88.3 ~ 107.9 N.m (9.0 ~ 11.0 kgf.m, 65.1 ~ 79.8 lb-ft)

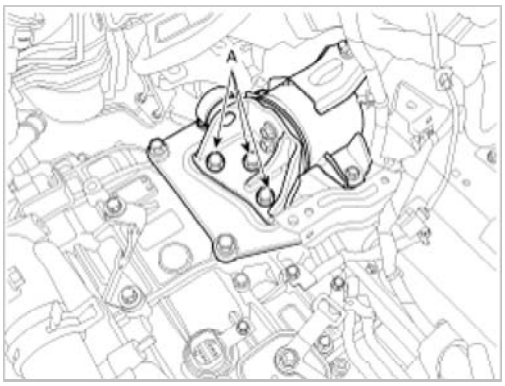

12. Lift the vehicle with a jack.
13. Remove the under cover (A).

14. Remove the Sub frame assembly. (Refer to "Front suspension system" in SS group.)
15. Remove the drive shaft assembly. (Refer to "Drive shaft assembly " in DS group.)

mcx30.com

NOTE

In the case of 2WD vehicle, not remove the transfer assembly.

17. Remove the dust cover(A).

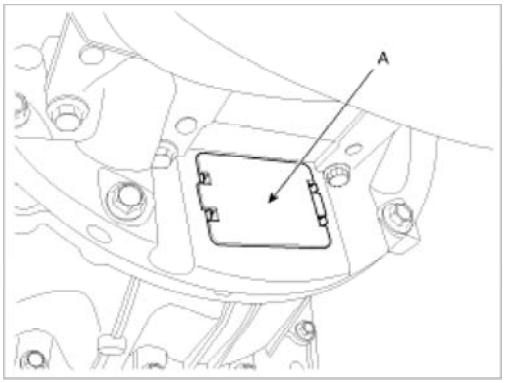

18. Remove the torque converter mounting bolt (A-4ea) with rotating the crankshaft.

Tightening torque:
45.1 ~ 52.0 N.m (4.6 ~ 5.3 kgf.m, 33.3 ~ 38.3 lb-ft)

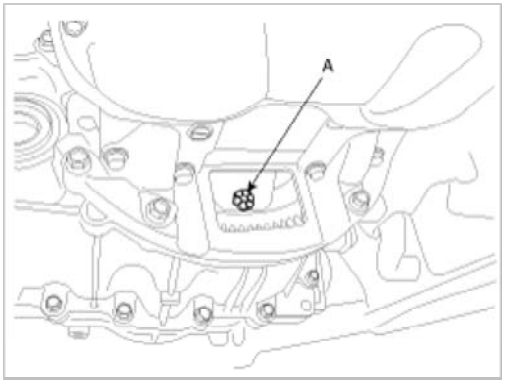

19. Remove the automatic transaxle with a jack after removing the mounting bolt (A-4ea, B-2ea).

Tightening torque:
(A) 29.4 ~ 41.2 N.m (3.0 ~ 4.2 kgf.m, 21.7 ~ 30.4 lb-ft)
(B) 42.2 ~ 54.0 N.m (4.3 ~5.5 kgf.m, 31.1 ~ 39.8 lb-ft)

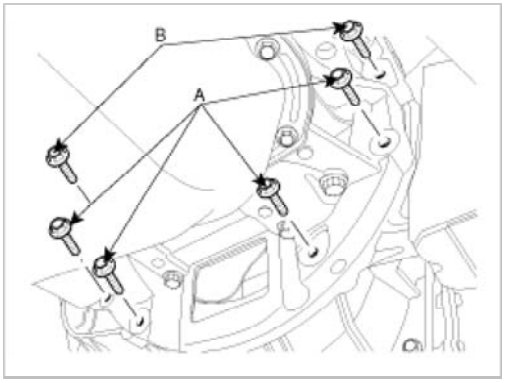

Installation

1. Installation is the reverse of removal.

CAUTION

mcx30.com

- Power steering fluid replacement and air bleeding (Refer to "General information" in ST group.)
- Adding automatic transaxle fluid. (Refer to "automatic transaxle system" in this group.)

NOTE

- When replacing the automatic transaxle, reset the automatic transaxle's values by using the GDS.

Automatic Transaxle System > Valve Body System > Components and Components Location

Component Location

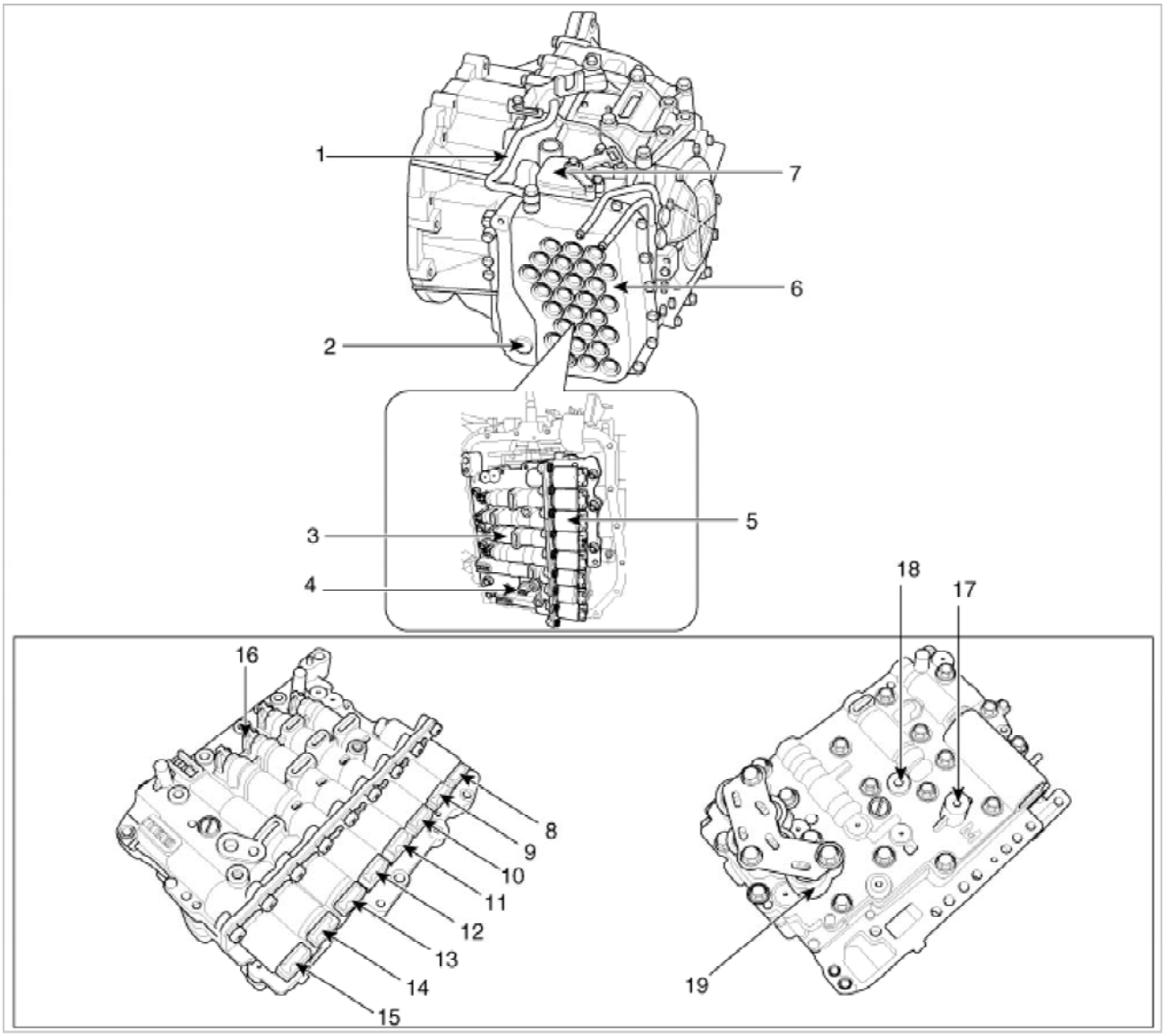

1. Air breather hose	11. UD(VFS,N/H)
2. Oil level plug	12. OD(VFS,N/H)
3. Valve body assembly	13. SS-B(ON/OFF)
4. Oil temperature sensor	14. SS-A(ON/OFF)
5. Solenoid valve	15. LINE pressure(VFS,N/H)
6. Valve body cover	16. PCV adjust screw
7. Inhibitor switch	17. UD/B pressure
8. T/Con (VFS N/L)	18. LR/B pressure(Low & Reverse Brake)
9. 35R(VFS,N/H)	19. Accumulator
10. 2/6B (VFS,N/L)	

mcx30.com

Automatic Transaxle System > Valve Body System > Valve Body > Specifications

Specification

Piece	3pcs
Spool	20ea
Control	Full line pressure variable control Torque converter release control
Solenoid valve	VFS : 6ea ON/OFF: 2ea
Pressure adjusting	7ea Line pressure (1), Reducing pressure (2), PCV (4)
Terminal type	Module

Automatic Transaxle System > Valve Body System > Valve Body > Repair procedures

Removal

1. Remove the battery and the battery tray. (Refer to "Charging system" in EE group.)
2. Remove the under cover (A).

3. Replace new gasket and the plug after drining the automatic transaxle fluid by removing the drain plug. (Refer to "Automatic transaxle system" in this group.)
4. Remove the valve body cover (A) and eyebolt (B).

Tightening torque:
(A) 9.8 ~ 11.8 N.m (1.0 ~ 1.2 kgf.m, 7.2 ~ 8.7 lb-ft)
(B) 34.3 ~ 44.1 N.m (3.5 ~ 4.5 kgf.m, 25.3 ~ 32.6 lb-ft)

CAUTION

The gasket of the eyebolt use new one.

NOTE

Remove installation bolts in the engin room first and then remove others under the vehicle.

mcx30.com

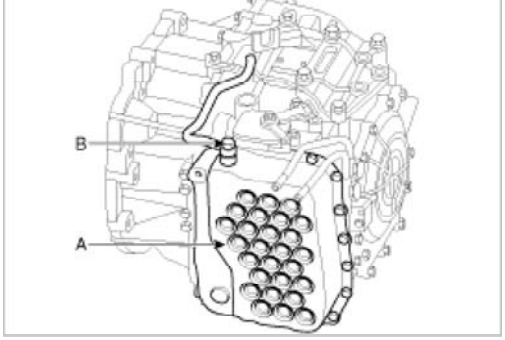

5. Remove the plate and the detend spring (A) after removing the bolt.

Tightening torque:
24.5 ~ 35.3 N.m (2.5 ~ 3.6 kgf.m, 18.1 ~ 26.0 lb-ft)

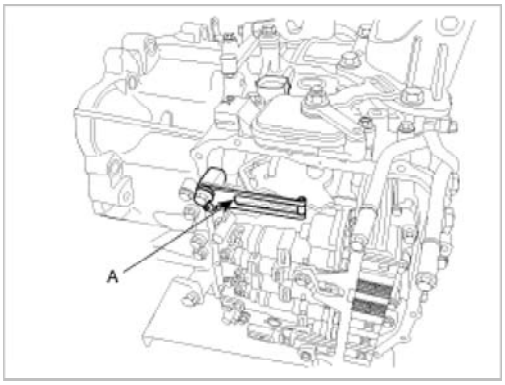

6. Remove the bolt (3ea) after disconnecting the solenoid valve (B) connector and the oil temperature sensor connector (A).

Tightening torque:
9.8 ~ 11.8 N.m (1.0 ~ 1.2 kgf.m, 7.2 ~ 8.7 lb-ft)

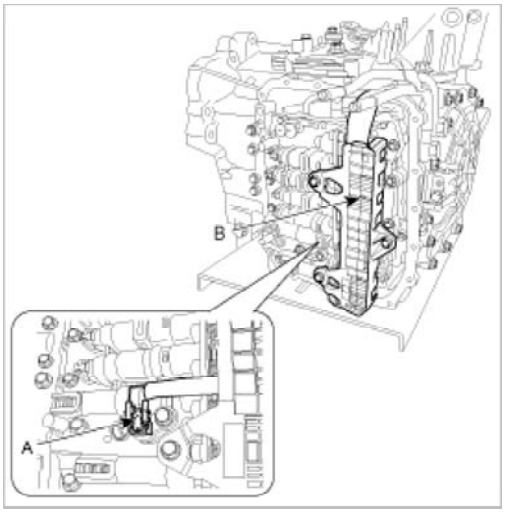

7. Remove the valve body assembly (A).

Tightening torque:
9.8 ~ 11.8 N.m (1.0 ~ 1.2 kgf.m, 7.2 ~ 8.7 lb-ft)

mcx30.com

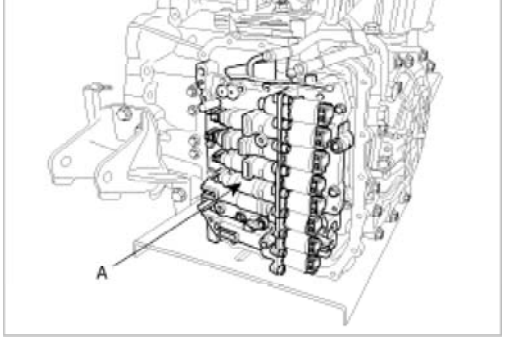

Installation

1. Installation is the reverse of removal.

CAUTION

After replacement or reinstallation procedure of the valve body assembly, must perform procedures below.

- Continue to apply liquid gasket at application points at the valve body cover with Ø2.5mm (0.0984in.) thickness.

  Liquid gasket Part name :
  Threebond 1281B or LOCTITE FMD-546

- Adding automatic transaxle fluid. (Refer to "automatic transaxle system" in this group.)

Automatic Transaxle System > Valve Body System > Solenoid valve > Specifications

Specification

Item	Function	Piece	Specification
VFS	26/B T/Con	2	Control pressure: 9.81~500.14kpa (0.1~5.1kgf/cm², 1.42~72.54 psi) Current value: 50~850mA Low Type, 5.1Ω
	Line pressure control	1	Control pressure: 500.14~9.81kpa (5.1~0.1kgf/cm², 72.54~1.42psi) Current value: 50~850mA High Type, 5.1Ω
	35R UD OD	3	Control pressure: 500.14~9.81kpa (5.1~0.1kgf/cm², 72.54~1.42psi) Current value: 50~850mA High Type, 5.1Ω
On/Off	SS-A SS-B	2	Control pressure: 490.33kpa (5.0kgf/cm², 71.12psi) 10~11Ω Low Type

Solenoid Valve Operation Table

	SS-A	SS-B	UD-VFS	OD-VFS	35R-VFS	26-VFS
			N/H	N/H	N/H	N/L
N, P	●		●		●	
1	Δ			Δ	●	
2				●	●	●
3		●		●		
4					●	
5		●	●			

mcx30.com

L	●				●	
R	●	●	●			

Automatic Transaxle System > Valve Body System > Solenoid valve > Repair procedures

Removal

1. Remove the battery and the battery tray. (Refer to "Charging system" in EE group.)
2. Remove the under cover (A).

3. Replace new gasket and the plug after drining the automatic transaxle fluid by removing the drain plug. (Refer to "Automatic transaxle system" in this group.)
4. Remove the valve cover (A) and eyebolt (B).

Tightening torque:
(A) 9.8 ~ 11.8 N.m (1.0 ~ 1.2 kgf.m, 7.2 ~ 8.7 lb-ft)
(B) 34.3 ~ 44.1 N.m (3.5 ~ 4.5 kgf.m, 25.3 ~ 32.6 lb-ft)

CAUTION

The gasket of the eyebolt use new one.

NOTE

Remove installation bolts in the engin room first and then remove others under the vehicle.

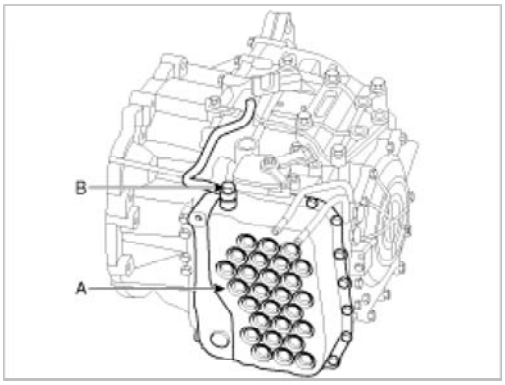

5. Remove the bolt (3ea) after disconnecting the solenoid valve connector (B) and the oil temperature sensor connector (A).

Tightening torque:
9.8 ~ 11.8 N.m (1.0 ~ 1.2 kgf.m, 7.2 ~ 8.7 lb-ft)

mcx30.com

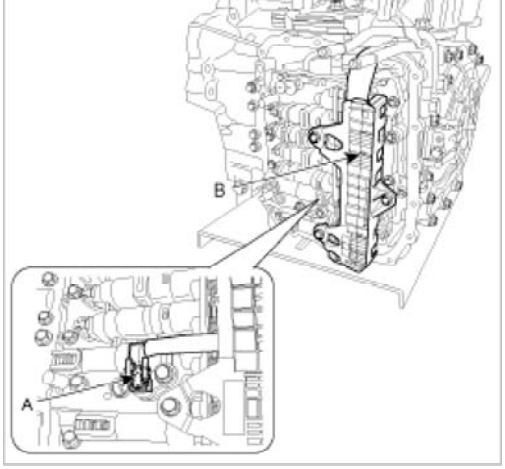

6. Remove the solenoid valve (A) after removing the solenoid support.

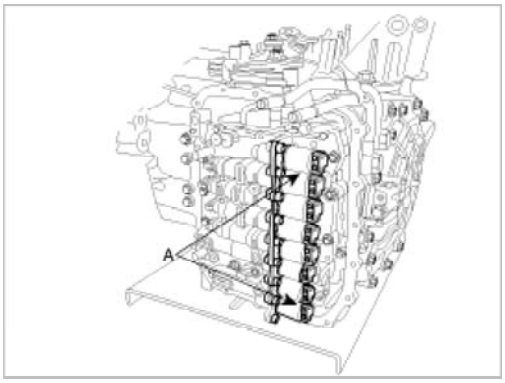

CAUTION

When installing, apply the ATF oil or White Vaseline to the O-ring not to be damaged.

Installation

1. Installation is the reverse of removal.

CAUTION

After replacement or reinstallation procedure of the valve body assembly, must perform procedures below.

- Continue to apply liquid gasket at application points at the valve body cover with Ø2.5mm (0.0984in.) thickness.

  Liquid gasket Part name :
  Threebond 1281B or LOCTITE FMD-546

- Adding automaticmatic transaxle fluid. (Refer to "automaticmatic transaxle system" in this group.)

Automatic Transaxle System > Automatic Transaxle Control System > Components and Components Location

Components Location

mcx30.com

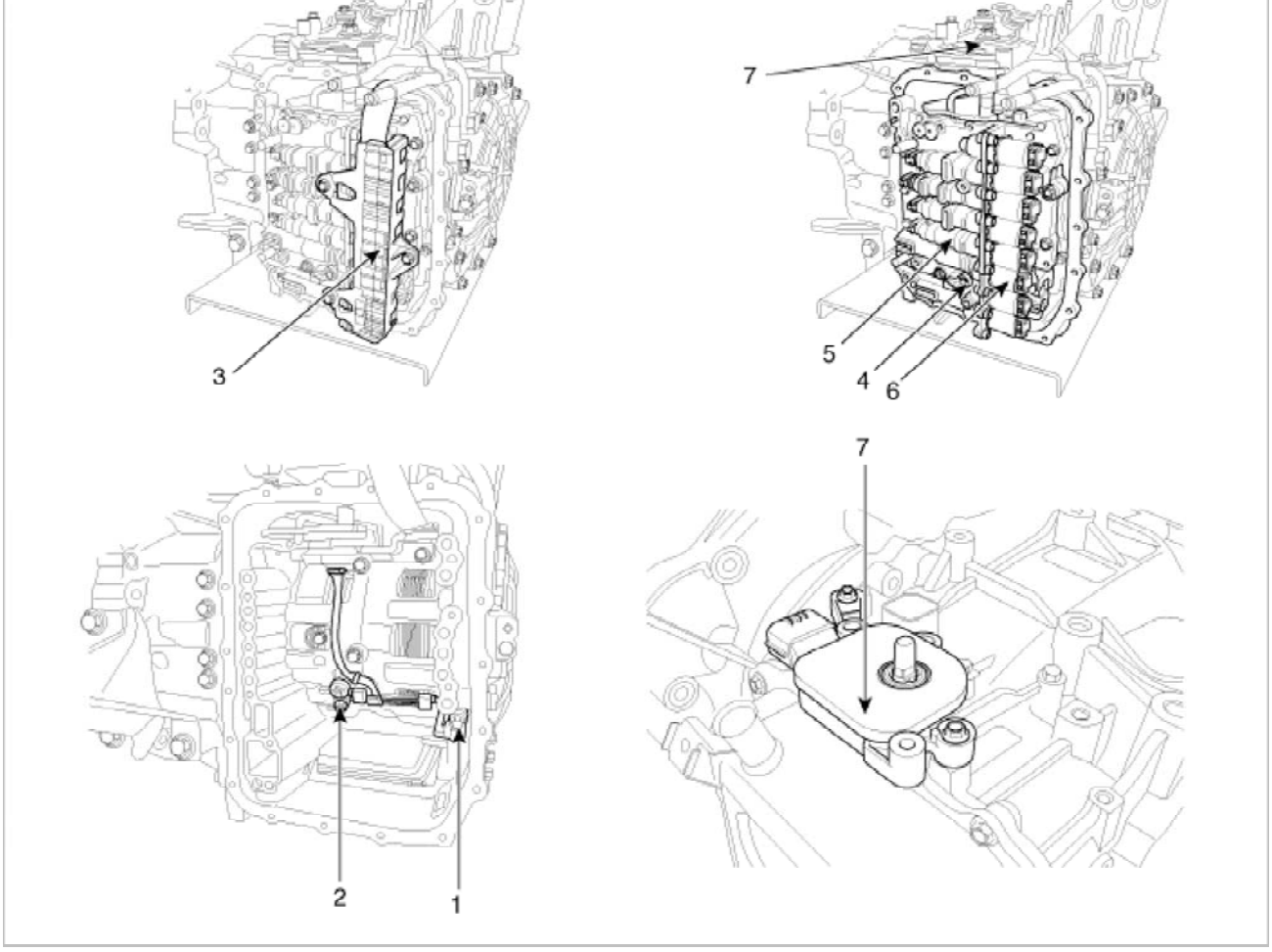

1. Input speed sensor 2. Output speed sensor 3. Solenoid valve connector 4. Oil temperature sensor	5. Valve body assembly 6. Solenoid valve 7. Inhibitor switch

Automatic Transaxle System > Automatic Transaxle Control System > Shift Lever > Components and Components Location

Components

mcx30.com

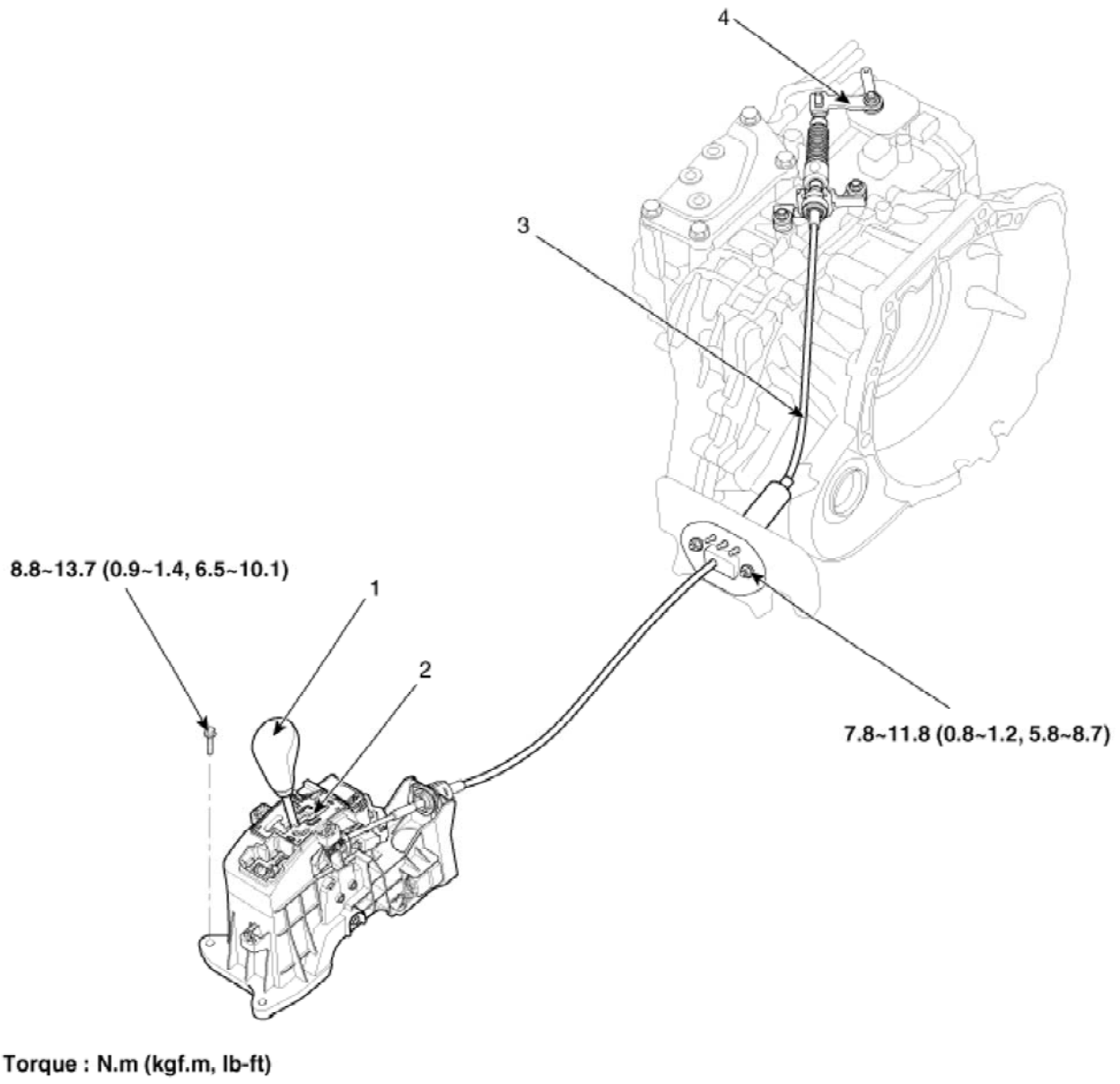

1. Shift lever knob 2. Shift lever assembly	3. Control cable assembly 4. Shift lever assembly(AT side)

Automatic Transaxle System > Automatic Transaxle Control System > Shift Lever > Repair procedures

Removal

1. Pull the gear knob (A) in the directionof the "F" and remove it, and then remove the console upper cover (B). (Refer to "Interior" in BD group)

mcx30.com

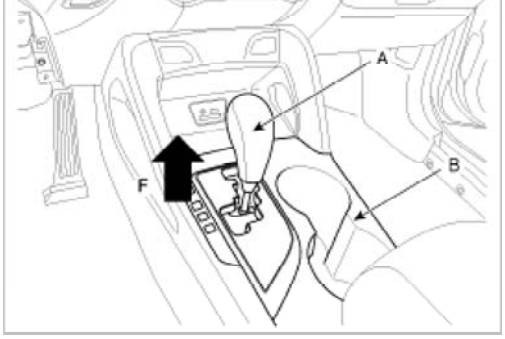

2. Remove the center console assembly. (Refer to "Interior" in BD group.)
3. Take off the clip (A) and the clamp (B) and then remove the shift cable (C).

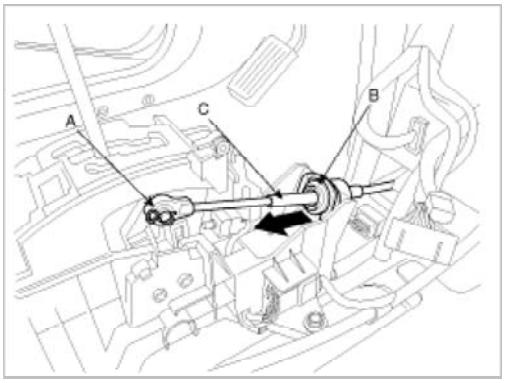

4. Disconnect sports mode connector (A).

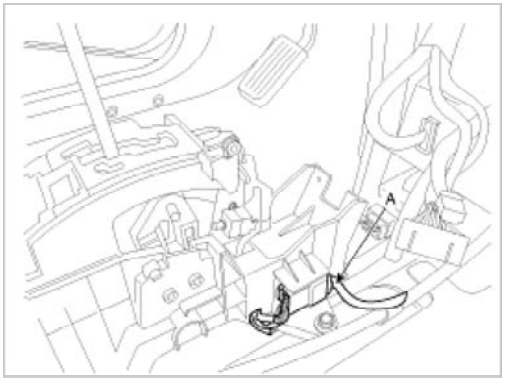

5. Remove the shift lever assembly (B) by removing the bolts (A-4ea).

Tightening torque:
8.8 ~ 13.7 N.m (0.9 ~ 1.4 kgf.m, 6.5 ~ 10.1 lb-ft)

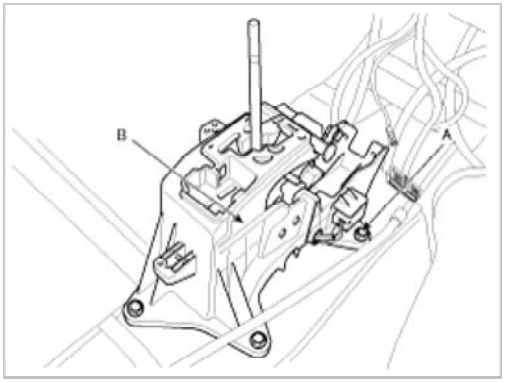

6. Remove the shift cable assembly in the vehicle after removing the nuts (B) and the retainer (A).

Tightening torque:

mcx30.com

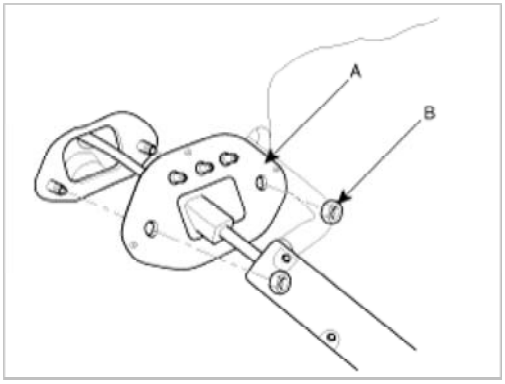

7. Remove the cable from the bracket at transaxle assembly side (Refer to "Automatic Transaxle" in this group).
8. Remove the shift cable at cabin room.

Inspection

1. Check the damage and operation of the control cable.
2. Check the damage of the boot.
3. Check the damage and corrosion of the bushing.
4. Check the damage or weakening of the spring.

Adjustment

Adjusting method for T/M control cable

1. Set room side lever and T/M side lever to "N" position.
2. Connect room side lever and shift cable.
3. Push cable to "F" direction shown to eliminate FREE PLAY.
4. Tighten adjusting nut (A).

Tightening torque:
7.8 ~ 11.8 N.m (0.8 ~ 1.2 kgf.m, 5.8 ~ 8.7 lb-ft)

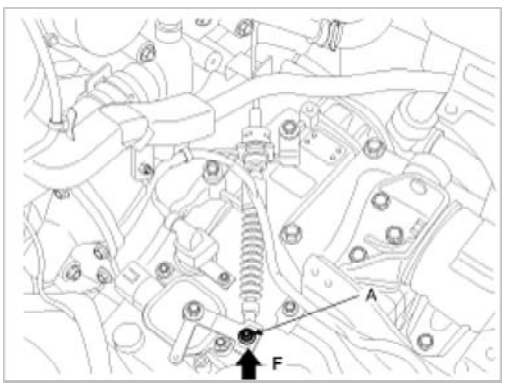

5. After adjusting according Check to be sure that this part operates surely at each range of T/M side corresponding to each position of room lever.

Installation

1. Installation is the reverse of removal.

CAUTION

Set room side lever and T/M side lever to "N" position.

mcx30.com

1. TCM connector and terminal function

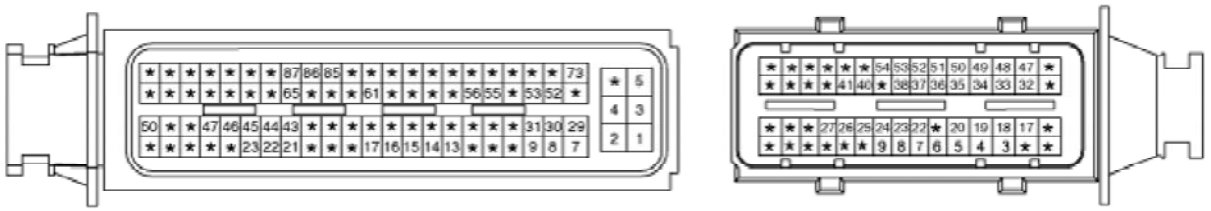

Connector [CHG-K] Connector [CHG-A]

2. TCM terminal function

Connector [CHG-A]

Pin	Description	Pin	Description
1	-	31	-
2	-	32	Shift solenoid F(SS-B)
3	Pressure control solenoid A(VFS-LINE)	33	Shift solenoid E(SS-A)
4	Torque Converter Clutch solenoid (VFS-T/Con)	34	Ground (Power 1)
5	Shift solenoid C(35R_VFS)	35	Ground (Power 2)
6	Input speed sensor power	36	Sports mode down switch
7	Output speed sensor power	37	Sports mode up switch
8	Input speed sensor signal	38	Sports mode Select switch
9	Output speed sensor signal	39	-
10	-	40	Inhibitor switch signal (S1)
11	-	41	-
12	-	42	-
13	-	43	-
14	-	44	-
15	-	45	-
16	-	46	-
17	Shift solenoid A(VFS-UD)	47	Solenoid supply power 1
18	Shift solenoid B(VFS-26)	48	Solenoid supply power 2
19	Shift lock solenoid	49	TCM Input power 1 (For solenoid)
20	Shift solenoid D(VFS-OD)	50	TCM Input power 2 (For solenoid)
21	-	51	Reserved
22	Rear lamp relay	52	Reserved
23	-	53	Oil temperature sensor (-)
24	Start relay	54	Oil temperature sensor (+)
25	Inhibitor switch signal (S2)	55	-
26	Inhibitor switch signal (S3)	56	-
27	Inhibitor switch signal (S4)	57	-
28	-	58	-
29	-	59	-

mcx30.com

Connector [CHG-K]

Pin	Description	Pin	Description
1	Power ground	31	Power ground
2	Battery power (B+)	32	Battery power (B+)
3	Power ground	33	CAN High
4	Battery power (B+)	34	CAN Low

3. TCM Terminal input/ output signal

Connector [CHG-A]

Pin	Description	Condition	Type	Level	Test result
1	-				
2	-				
3	Pressure control solenoid A (VFS-LINE)		Output	0V/Battery voltage level 9V < Battery voltage level < 16V	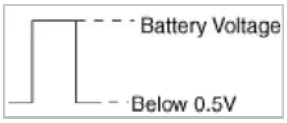
4	Torque Converter Clutch solenoid (VFS-T/Con)		Output	0V/Battery voltage level 9V < Battery voltage level < 16V	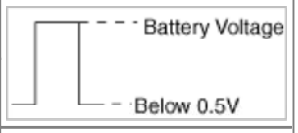
5	Shift solenoid C(35R_VFS)		Output	0V/Battery voltage level 9V < Battery voltage level < 16V	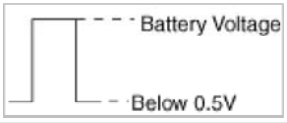
6	Input speed sensor power	ON OFF	Power	0V/7.5V	7.5V 0.3 V
7	Output speed sensor power	ON OFF	Power	0V/7.5V	7.5V 0.3 V
8	Input speed sensor signal	High Low	Input	0.7V/1.4V	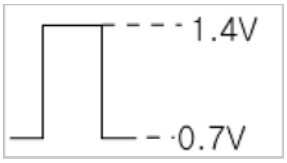
9	Output speed sensor signal	High Low	Input	0.7V/1.4V	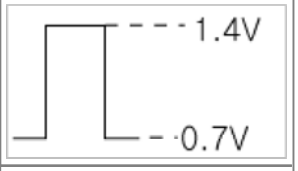
10	-				
11	-				
12	-				
13	-				
14	-				
15	-				
16	-				
				0V/Battery voltage level	

mcx30.com

17	Shift solenoid A(VFS-UD)		Output	Power supply : V_SOL2	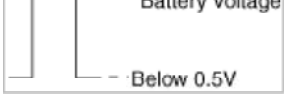
18	Shift solenoid B(VFS-26)		Output	0V/Battery voltage level 9V < Battery voltage level < 16V Power supply : V_SOL2	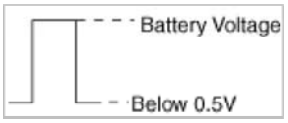
19	Shift lock solenoid	High	Output	0V/Battery voltage level	Battery voltage level
		Low		9V < Battery voltage level < 16V	0.3 V
20	Shift solenoid D(VFS-OD)		Output	0V/Battery voltage level 9V < Battery voltage level < 16V Power supply : V_SOL1	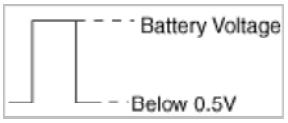
21	-				
22	Rear lamp relay	R ON	Output	0V/Battery voltage level	0.3V
		Other		9V < Battery voltage level < 16V	Battery voltage level
23	-				
24	Start relay	High	Output	0V/Battery voltage level	Battery voltage level
		Low		9V < Battery voltage level < 16V	0.3 V
25	Inhibitor switch signal (S2)	High	Input	0V/Battery voltage level	Battery voltage level
		Low		9V < Battery voltage level < 16V	0.3 V
26	Inhibitor switch signal (S3)	High	Input	0V/Battery voltage level	Battery voltage level
		Low		9V < Battery voltage level < 16V	0.3 V
27	Inhibitor switch signal (S4)	High	Input	0V/Battery voltage level	Battery voltage level
		Low		9V < Battery voltage level < 16V	0.3 V
28	-				
29	-				
30	-				
31	-				
32	Shift solenoid F(SS-B)	High	Output	0V/Battery voltage level	Battery voltage level
		Low		9V < Battery voltage level < 16V	0.3 V
33	Shift solenoid E(SS-A)	High	Output	0V/Battery voltage level	Battery voltage level
		Low		9V < Battery voltage level < 16V	0.3 V
34	Ground (Power 1)		Ground	0V	0V
35	Ground (Power 2)		Ground	0V	0V
36	Sports mode down switch	Down ON	Input	0V/Battery voltage level	0.3V
		Other		9V < Battery voltage level < 16V	Battery voltage level
37	Sports mode up switch	Up ON	Input	0V/Battery voltage level	0.3V
		Other		9V < Battery voltage level < 16V	Battery voltage level
38	Sports mode select switch	Sport mode	Input	0V/Battery voltage level	0.3V
		Other		9V < Battery voltage level < 16V	Battery voltage level
39	-				
40	Inhibitor switch signal (S1)	High	Input	0V/Battery voltage level	Battery voltage level
		Low		9V < Battery voltage level < 16V	0.3 V

mcx30.com

42	-				
43	-				
44	-				
45	-				
46	-				
47	Solenoid supply power 1	ON	Power	0V/Battery voltage level	Battery voltage level
		OFF		9V < Battery voltage level < 16V	0.3 V
48	Solenoid supply power 2	ON	Power	0V/Battery voltage level	Battery voltage level
		OFF		9V < Battery voltage level < 16V	0.3 V
49	TCM Input power 1 (For solenoid)		Power	Battery voltage level	Battery voltage level
				9V < Battery voltage level < 16V	
50	TCM Input power 2 (For solenoid)		Power	Battery voltage level	Battery voltage level
				9V < Battery voltage level < 16V	
51	-				
52	-				
53	Oil temperature sensor (-)		Ground	0V	0V
54	Oil temperature sensor (+)	ON	Input	0V/3.3V	Sensor level (0V~3.3V)
		OFF			0.3V
54	-				
55	-				
56	-				
57	-				
58	-				
59	-				
60	-				

Connector [CHG-K]

Pin	Description	Condition	Type	Level	Test result
1	Power ground		Ground	0V	0V
2	Battery power (B+)	ON	Power	0V/Battery voltage level	Battery voltage level
		OFF		9V < Battery voltage level < 16V	0.3 V
3	Power ground		Ground	0V	0V
4	Battery power (B+)	ON	Power	0V/Battery voltage level	Battery voltage level
		OFF		9V < Battery voltage level < 16V	0.3 V
5	Power ground		Ground	0V	0V
6	Battery power (B+)		Power	Battery voltage level	Battery voltage level
				9V < Battery voltage level < 16V	

Automatic Transaxle System > Automatic Transaxle Control System > Transaxle Control Module (TCM) > Repair procedures

Replacement

mcx30.com

NOTE

In the case of the vehicle equipped with immobilizer or button engine start system, perform "Key Teaching" procedure together (Refer to "Immobilizer" or "Button Engine Start System in BE group).

1. Turn ignition switch OFF and disconnect the negative (-) battery cable.
2. Disconnect the TCM Connector (A).

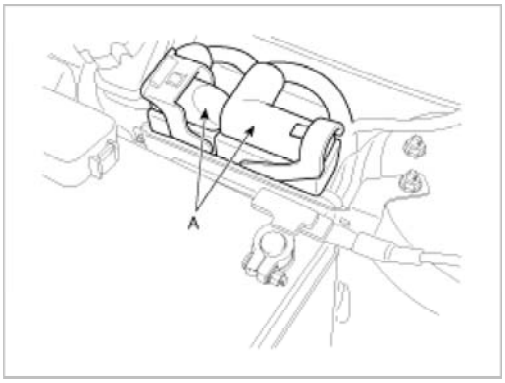

3. Remove the battery (Refer to "Chargin System" in EE group).
4. Remove the mounting bolts (A) and nut (B), and then remove the TCM (C).

Tightening torque:
(A) 21.6 ~ 32.4 N.m (2.2 ~ 3.3 kgf.m, 15.9 ~ 23.9 lb-ft)
(B) 9.8 ~ 14.7 N.m (1.0 ~ 1.5 kgf.m, 7.2 ~ 10.9 lb-ft)

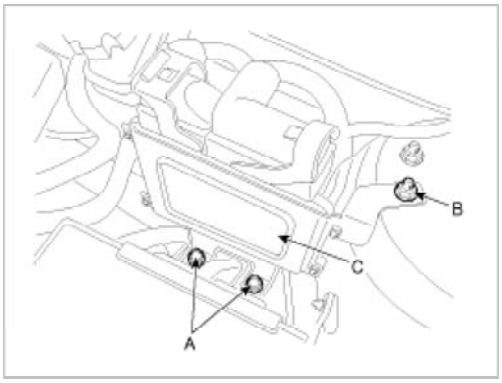

TCM Problem Inspection Procedure

1. TEST TCM GROUND CIRCUIT: Measure resistance between TCM and chassis ground using the backside of TCM harness connector as TCM side check point. If the problem is found, repair it.

Specification: Below 1Ω

2. TEST TCM CONNECTOR: Disconnect the TCM connector and visually check the ground terminals on TCM side and harness side for bent pins or poor contact pressure. If the problem is found, repair it.
3. If problem is not found in Step 1 and 2, the TCM could be faulty. If so, make sure there were no DTC's before swapping the TCM with a new one, and then check the vehicle again. If DTC's were found, examine this first before swapping TCM.
4. RE-TEST THE ORIGINAL TCM: Install the original TCM (may be broken) into a known-good vehicle and check the vehicle. If the problem occurs again, replace the original TCM with a new one. If problem does not occur, this is intermittent problem (Refer to “Intermittent Problem Inspection Procedure” in Basic Inspection Procedure).

Adjustment

TCM Learning

When shift shock is occurred or parts related with the transaxle are replaced, TCM learning should be performed.

mcx30.com

- Transaxle assembly replacement
- TCM replacement
- TCM upgrading

1. TCM learning condition
   - ATF temperature: 60~115°C (140~239°F)
2. TCM learning procedure
   A. Stop learning
   Repeat the below shift pattern four times or more with stepping on the brake.

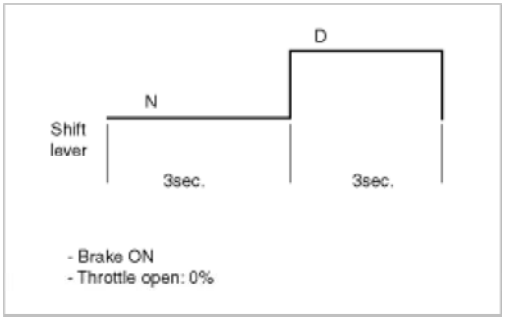

   B. Driving learning
   1. Drive the vehicle through all gears at D range. Drive from stop to 1st to 2nd to 3rd to 4th to 5th to 6th with keeping fixed throttle open.
   2. Down shift from 6th to 5th, 5th to 4th, 4th to 3rd, 3rd to 2nd, 2nd to 1st.
   3. Repeat the above driving pattern four times or more.

NOTE

Up-shift throttle open : 15~30%

Automatic Transaxle System > Automatic Transaxle Control System > Input Speed Sensor > Description and Operation

Description

- Integrated one unit for input & output speed sensor
- Differential current type (low: 7mA, high: 14mA)
- Failsafe: 4th gear hold (D), 2nd ~ 4th manual shift (S)

Automatic Transaxle System > Automatic Transaxle Control System > Input Speed Sensor > Specifications

Specification

Item	Specification
Type	Hall Effect Sensor, 2pins (Power: 9V, Signal)
Operation condition	-40 ~150°C [-40 ~ 302°F]
Sensor length	52.7~52.9mm (2.0748~2.0827in.)
Air gap	0.95~1.65mm (0.0374~0.0650in.)

Automatic Transaxle System > Automatic Transaxle Control System > Input Speed Sensor > Repair procedures

Removal

1. Remove the battery and the battery tray. (Refer to "Charging system" in EE group.)
2. Remove the under cover (A).

mcx30.com

3. Replace new gasket and the plug after drining the automatic transaxle fluid by removing the drain plug. (Refer to "Automatic transaxle system" in this group.)
4. Remove the valve body cover (A) and eyebolt (B).

Tightening torque:
(A) 9.8 ~ 11.8 N.m (1.0 ~ 1.2 kgf.m, 7.2 ~ 8.7 lb-ft)
(B) 34.3 ~ 44.1 N.m (3.5 ~ 4.5 kgf.m, 25.3 ~ 32.6 lb-ft)

CAUTION

The gasket of the eyebolt use new one.

NOTE

Remove installation bolts in the engin room first and then remove others under the vehicle.

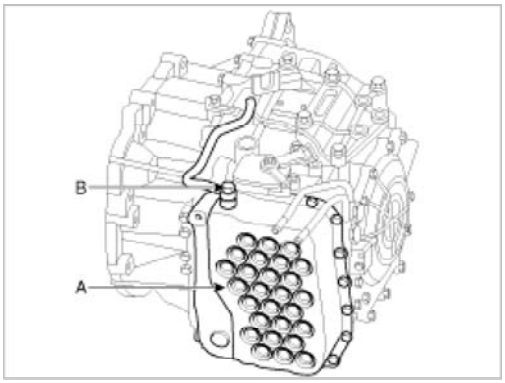

5. Remove the plate and the detend spring (A) after removing the bolt.

Tightening torque:
24.5 ~ 35.3 N.m (2.5 ~ 3.6 kgf.m, 18.1 ~ 26.0 lb-ft)

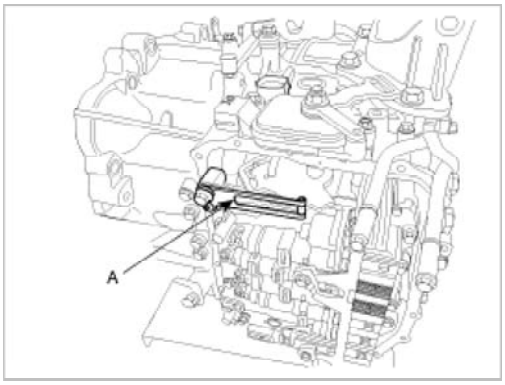

6. Remove the bolt (3ea) after disconnecting the solenoid valve connector (A) and the oil temperature sensor connector (B).

mcx30.com

9.8 ~ 11.8 N.m (1.0 ~ 1.2 kgf.m, 7.2 ~ 8.7 lb-ft)

CAUTION

Be careful not to damage the harness lock connector.

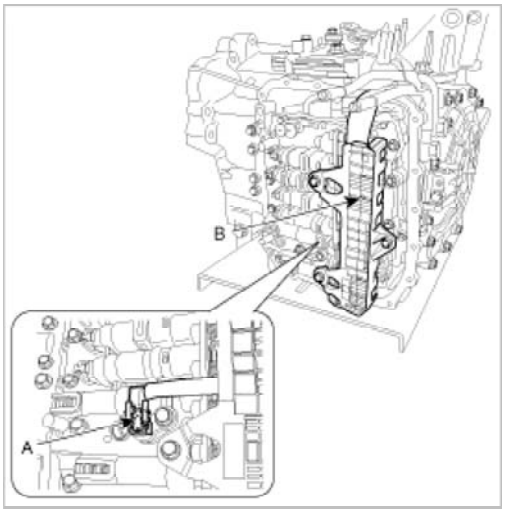

7. Remove the valve body assembly (A).

Tightening torque:
9.8 ~ 11.8 N.m (1.0 ~ 1.2 kgf.m, 7.2 ~ 8.7 lb-ft)

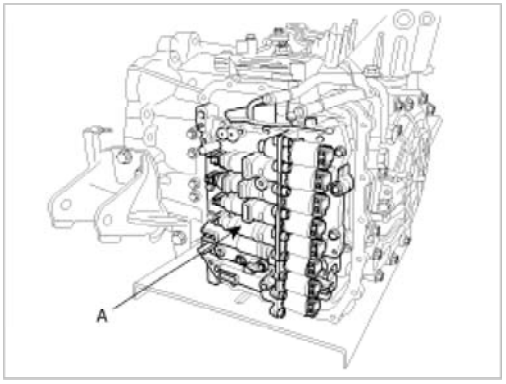

8. Disconnect the input & output speed sensor connector(A).
9. Remove the input & output speed sensor (B) after removing the bolts(2ea).

Tightening torque:
9.8 ~ 11.8 N.m (1.0 ~ 1.2 kgf.m, 7.2 ~ 8.7 lb-ft)

mcx30.com

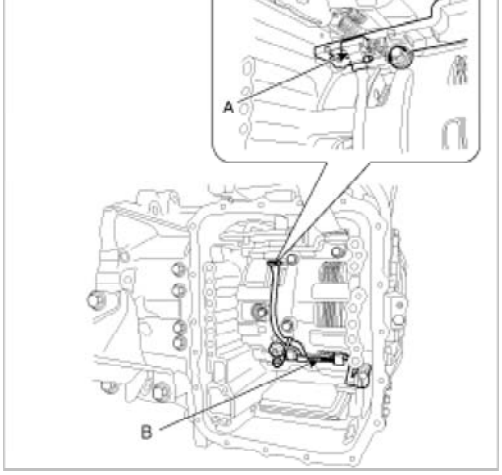

Installation

1. Installation is the reverse of removal.

> **CAUTION**
>
> After replacement or reinstallation procedure of the valve body assembly, must perform procedures below.
> - Continue to apply liquid gasket at application points at the valve body cover with Ø2.5mm (0.0984in.) thickness.
>
> Liquid gasket Part name :
> Threebond 1281B or LOCTITE FMD-546
>
> - Adding automaticmatic transaxle fluid. (Refer to "automaticmatic transaxle system" in this group.)

Automatic Transaxle System > Automatic Transaxle Control System > Output Speed Sensor > Description and Operation

Description

- Integrated one unit for input & output speed sensor
- Differential current type (low: 7mA, high: 14mA)
- Failsafe: 4th gear hold (D), 2nd ~ 4th manual shift (S)

Automatic Transaxle System > Automatic Transaxle Control System > Output Speed Sensor > Specifications

Specification

Item	Specification
Type	Hall Effect Sensor, 2pins (Power: 9V, Signal)
Operation condition	-40 ~150°C [-40 ~ 302°F]
Sensor length	33.6~33.8mm (1.3228~1.3307in.)
Air gap	0.25~1.9mm (0.0098~0.0748in.)

Automatic Transaxle System > Automatic Transaxle Control System > Output Speed Sensor > Repair procedures

Removal

mcx30.com

2. Remove the under cover (A).

3. Replace new gasket and the plug after drining the automatic transaxle fluid by removing the drain plug. (Refer to "Automatic transaxle system" in this group.)
4. Remove the valve body cover (A) and eyebolt (B).

Tightening torque:
(A) 9.8 ~ 11.8 N.m (1.0 ~ 1.2 kgf.m, 7.2 ~ 8.7 lb-ft)
(B) 34.3 ~ 44.1 N.m (3.5 ~ 4.5 kgf.m, 25.3 ~ 32.6 lb-ft)

CAUTION

The gasket of the eyebolt use new one.

NOTE

Remove installation bolts in the engin room first and then remove others under the vehicle.

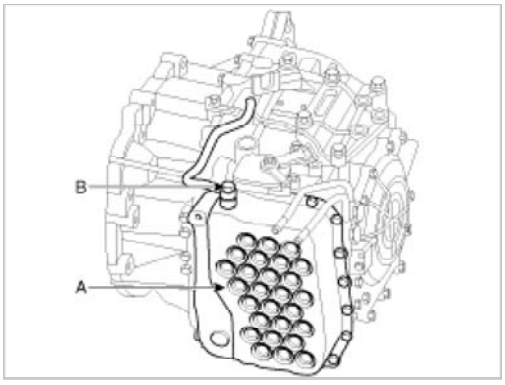

5. Remove the plate and the detend spring (A) after removing the bolt.

Tightening torque:
24.5 ~ 35.3 N.m (2.5 ~ 3.6 kgf.m, 18.1 ~ 26.0 lb-ft)

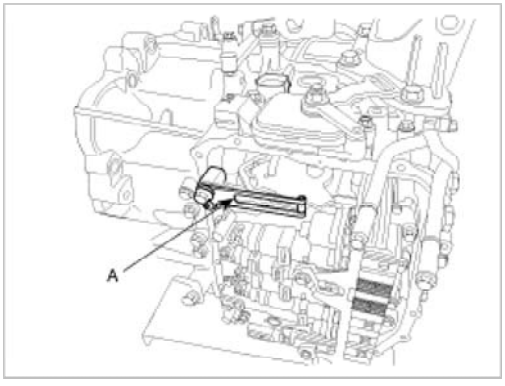

6. Remove the bolt (3ea) after disconnecting the solenoid valve connector (A) and the oil temperature sensor connector

mcx30.com

Tightening torque:
9.8 ~ 11.8 N.m (1.0 ~ 1.2 kgf.m, 7.2 ~ 8.7 lb-ft)

CAUTION

Be careful not to damage the harness lock connector.

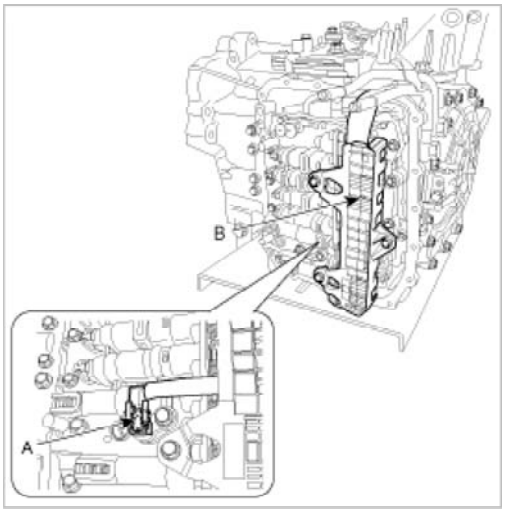

7. Remove the valve body assembly (A).

Tightening torque:
9.8 ~ 11.8 N.m (1.0 ~ 1.2 kgf.m, 7.2 ~ 8.7 lb-ft)

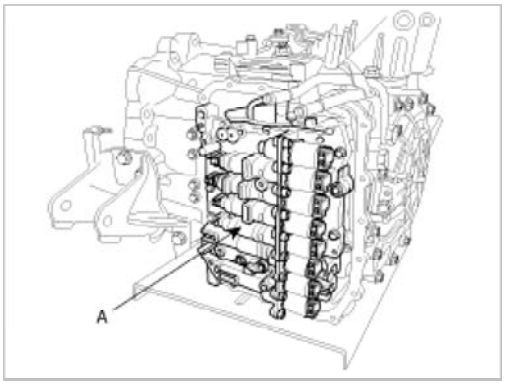

8. Disconnect the input & output speed sensor connector (A).
9. Remove the input & output speed sensor (B) after removing the bolts(2ea).

Tightening torque:
9.8 ~ 11.8 N.m (1.0 ~ 1.2 kgf.m, 7.2 ~ 8.7 lb-ft)

mcx30.com

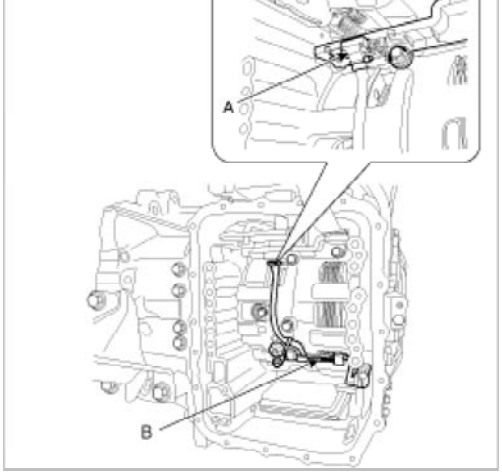

Installation

1. Installation is the reverse of removal.

> **CAUTION**
>
> After replacement or reinstallation procedure of the valve body assembly, must perform procedures below.
> - Continue to apply liquid gasket at application points at the valve body cover with Ø2.5mm (0.0984in.) thickness.
>
> Liquid gasket Part name :
> Threebond 1281B or LOCTITE FMD-546
>
> - Adding automaticmatic transaxle fluid. (Refer to "automaticmatic transaxle system" in this group.)

Automatic Transaxle System > Automatic Transaxle Control System > Transaxle Oil Temperature Sensor > Specifications

Specification

Item	Specification
Type	Negative Thermal Coefficient Type
Operation temperature	-40~165°C [-40~329°F]
Resistance	4.81kΩ~39 Ω
Failsafe	Oil temperature set to default value [80°C(176°F)]

Automatic Transaxle System > Automatic Transaxle Control System > Transaxle Oil Temperature Sensor > Repair procedures

Removal

1. Remove the battery and the battery tray. (Refer to "Charging system" in EE group.)
2. Remove the under cover (A).

mcx30.com

3. Replace new gasket and the plug after drining the automatic transaxle fluid by removing the drain plug. (Refer to "Automatic transaxle system" in this group.)
4. Remove the valve body cover (A) and eyebolt (B).

Tightening torque:
(A) 9.8 ~ 11.8 N.m (1.0 ~ 1.2 kgf.m, 7.2 ~ 8.7 lb-ft)
(B) 34.3 ~ 44.1 N.m (3.5 ~ 4.5 kgf.m, 25.3 ~ 32.6 lb-ft)

CAUTION

The gasket of the eyebolt use new one.

NOTE

Remove installation bolts in the engin room first and then remove others under the vehicle.

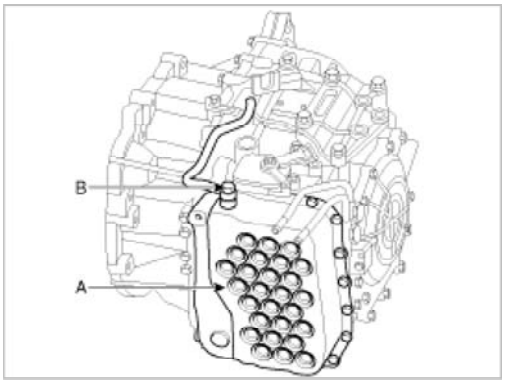

5. Disconnect the oil temperature sensor connector (A).

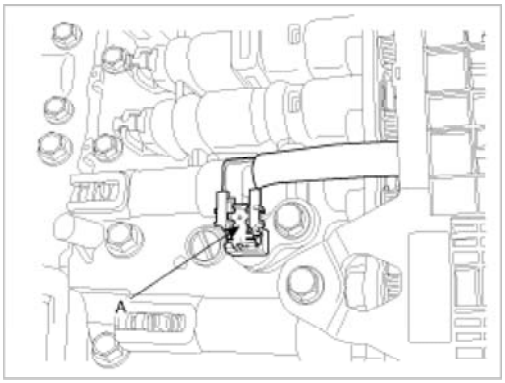

6. Remove the oil temperature sensor (A) after removing a bolt.

Tightening torque:
9.8 ~ 11.8 N.m (1.0 ~ 1.2 kgf.m, 7.2 ~ 8.7 lb-ft)

mcx30.com

CAUTION

Be careful not to damage the harness lock connector.

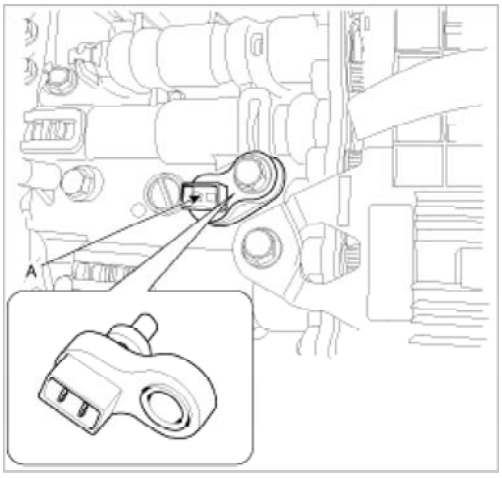

Installation

1. Installation is the reverse of removal.

CAUTION

After replacement or reinstallation procedure of the valve body assembly, must perform procedures below.

- Continue to apply liquid gasket at application points at the valve body cover with Ø2.5mm (0.0984in.) thickness.

  Liquid gasket Part name :
  Threebond 1281B or LOCTITE FMD-546

- Adding automaticmatic transaxle fluid. (Refer to "automaticmatic transaxle system" in this group.)

Automatic Transaxle System > Automatic Transaxle Control System > Inhibiter Switch > Description and Operation

Description

Item	Specification
Type	Combination of output signals from 4 terminals
Power supply	12V
Range detection	7-position (P, R, N, D, X, Y, Z)
Failsafe	1st, 2nd gear is prohibited.

Automatic Transaxle System > Automatic Transaxle Control System > Inhibiter Switch > Repair procedures

Removal

1. Set room side lever and T/M side lever to "N" position.
2. Remove the battery and the battery tray. (Refer to "Charging system" in EE group.)
3. Remove the air cleaner assembly. (Refer to "Intake manifold" in EM group.)
4. Remove the shift cable mounting nut (B).
5. Disconnect the inhibitor switch connector (A).

mcx30.com

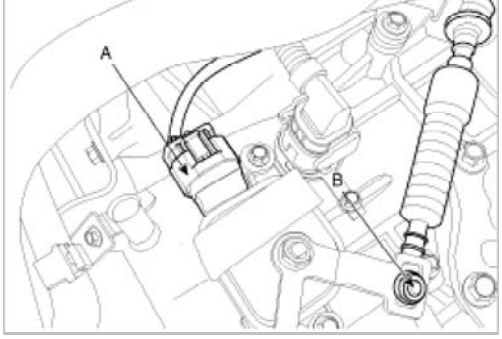

6. Remove the manual control lever (A) and the washer (B) after removing a nut (C).

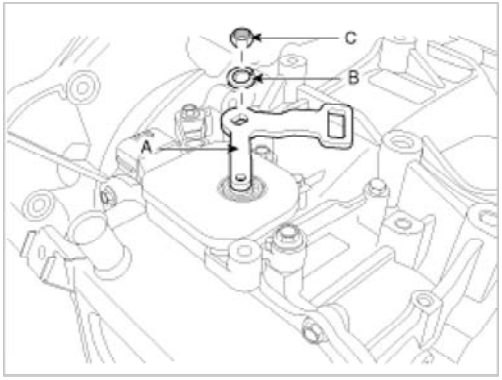

> **CAUTION**
>
> When installing, fix the manual control lever and the inhibitor switch with Ø5mm (0.1969in.) fixing jig.
> And then tighten the inhibitor assembly mounting bolts.

7. Remove the inhibitor assembly (A) after removing the bolts (2ea).

Tightening torque:
9.8 ~ 11.8 N.m (1.0 ~ 1.2 kgf.m, 7.2 ~ 8.7 lb-ft)

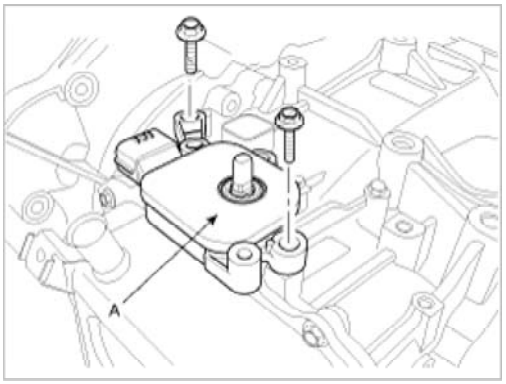

> **CAUTION**
>
> When installing, tighten the inhibitor assembly mounting bolt lightly.

Installation

1. Installation is the reverse of removal.

mcx30.com